VOLTAGE-DIVIDER

BJT DC BIASING

prepared by:

Gyro A. Madrona

Electronics Engineer

GRADING SYSTEM

FINAL GRADE

30%

PRELIM

30%

MIDTERM

40%

ENDTERM

TERM GRADE

50%

WEEKLY

50%

EXAM

100%

LABORATORY

PENALTY

0

ABSENT

3

45-min LATE

7 max

15-min LATE

TOPIC OUTLINE

Review: **Thevenin's Theorem**

Voltage-Divider Bias Circuit

- Thevenin Voltage
- Thevenin Resistance
- Base-Emitter Loop
- Collector-Emitter Loop
- Load Line Analysis

REVIEW: THEVENIN'S THEOREM

It is possible to simplify any **linear** circuit, irrespective of how complex it is, to an equivalent circuit with a single voltage source, V_{TH} and a series resistance, R_{TH}.

Arbitrary Network

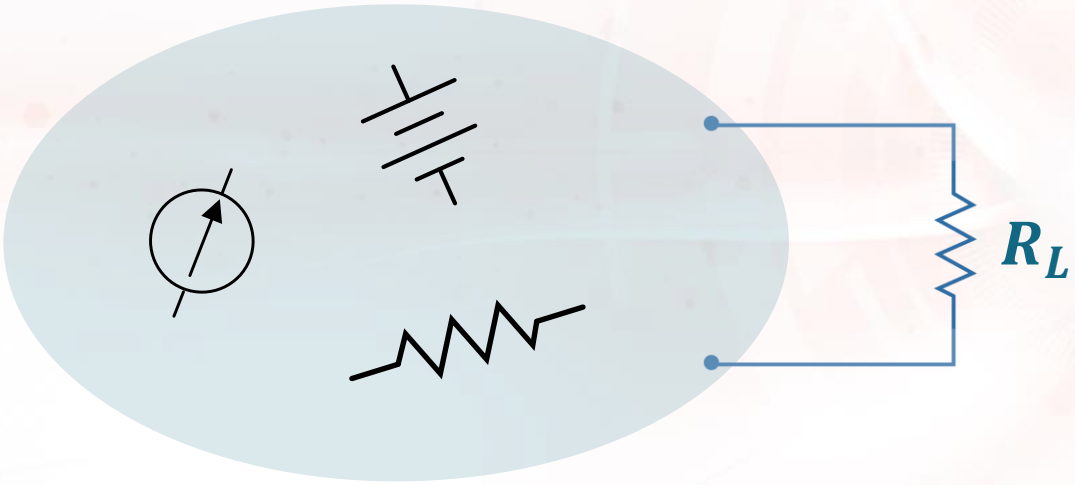

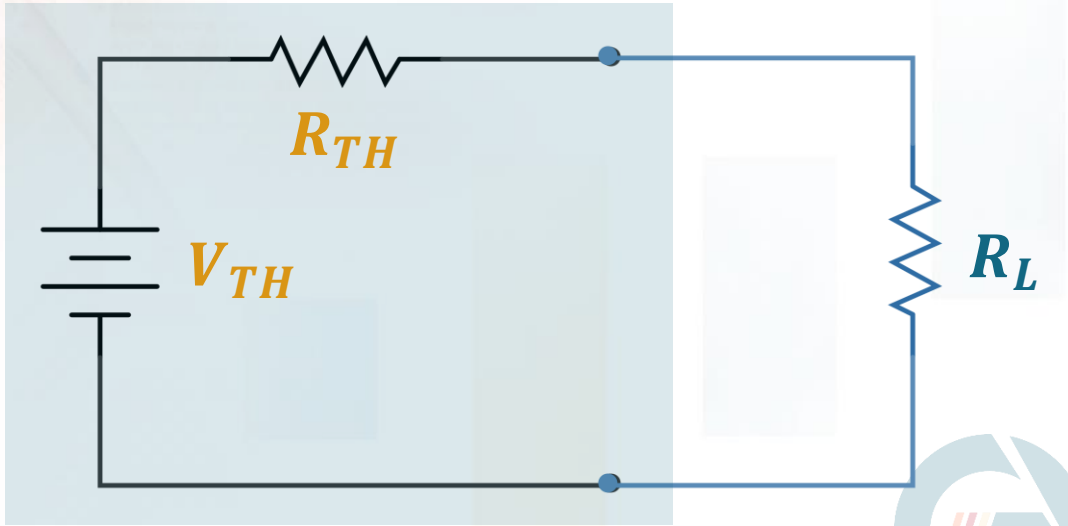

THEVENIN'S VOLTAGE, V_{TH}

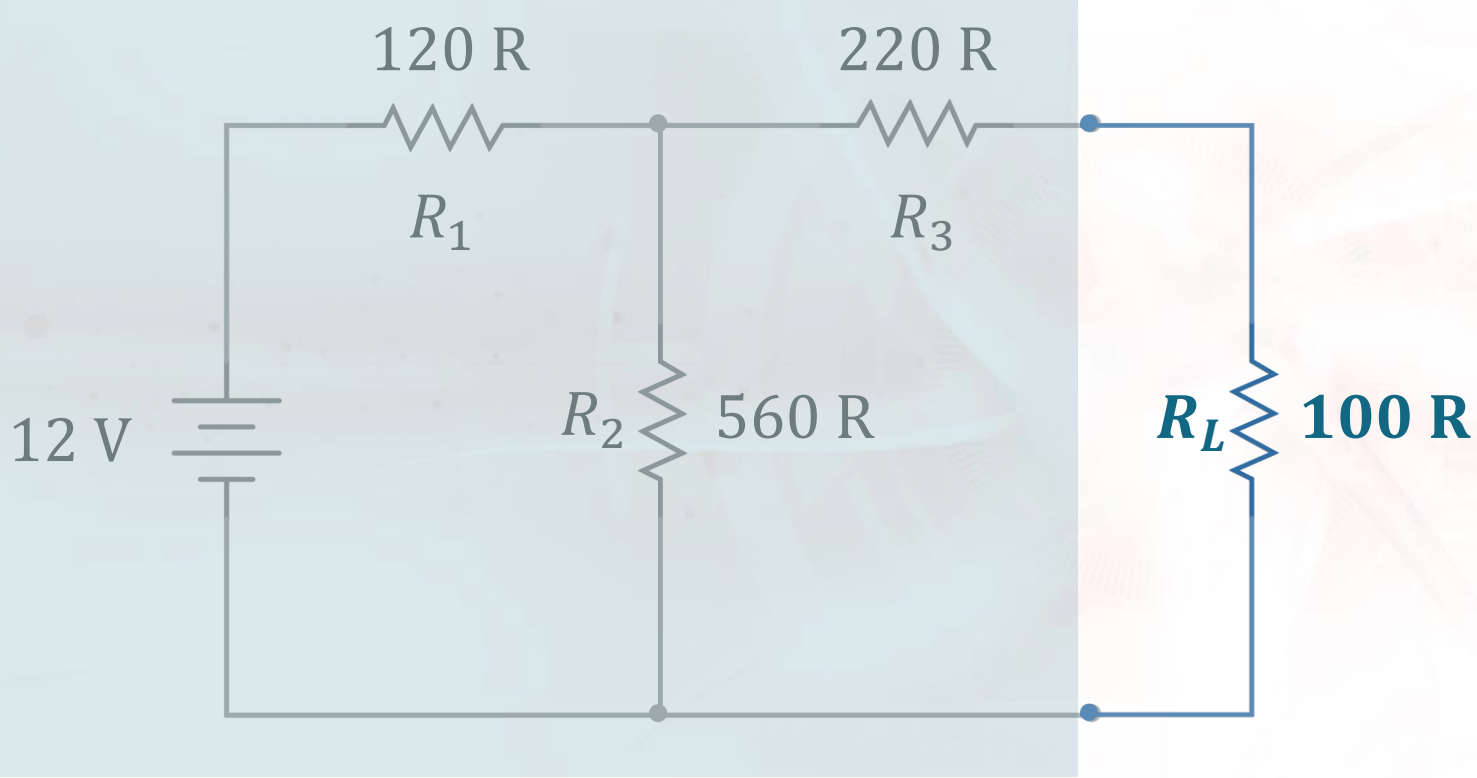

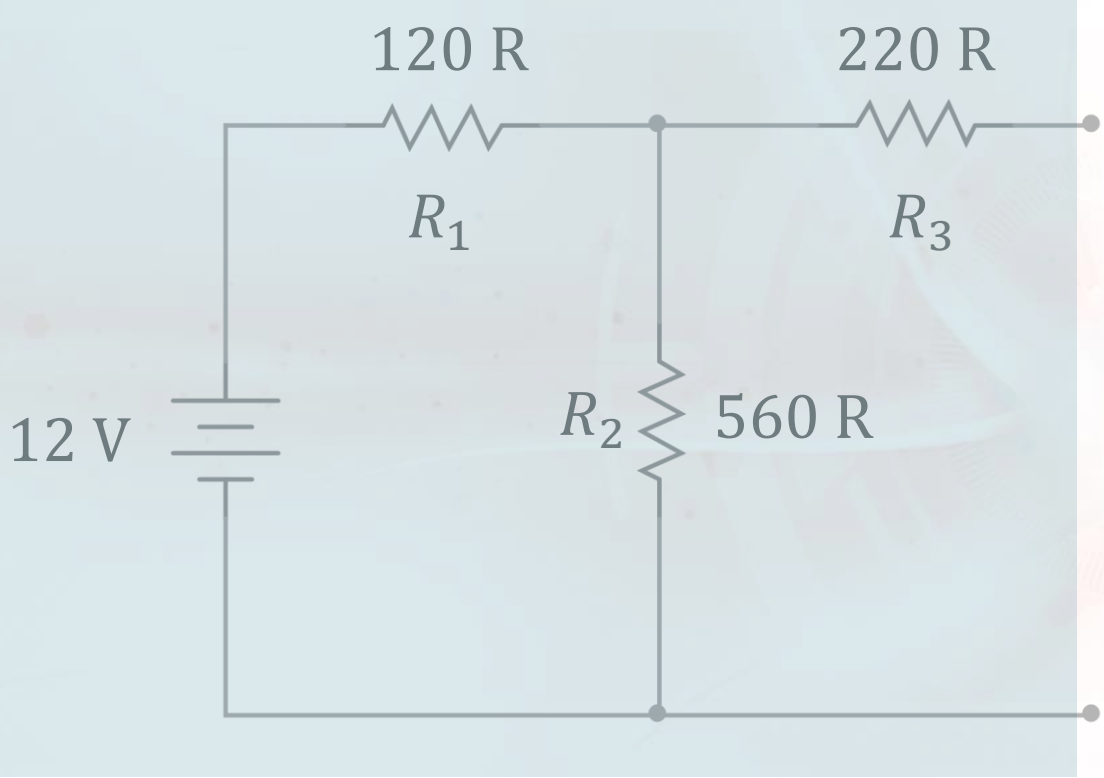

V_{TH}

THEVENIN'S RESISTANCE, R_{TH}

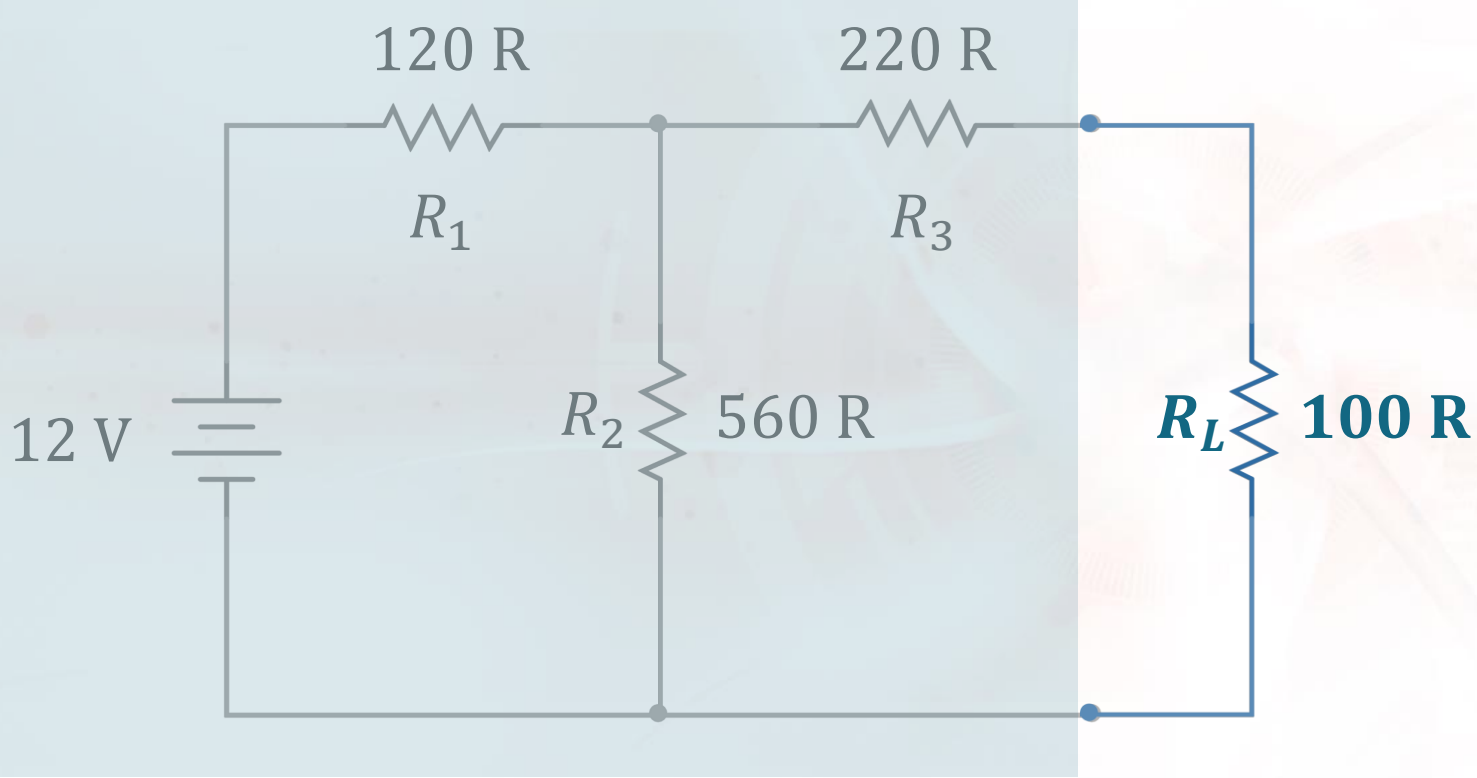

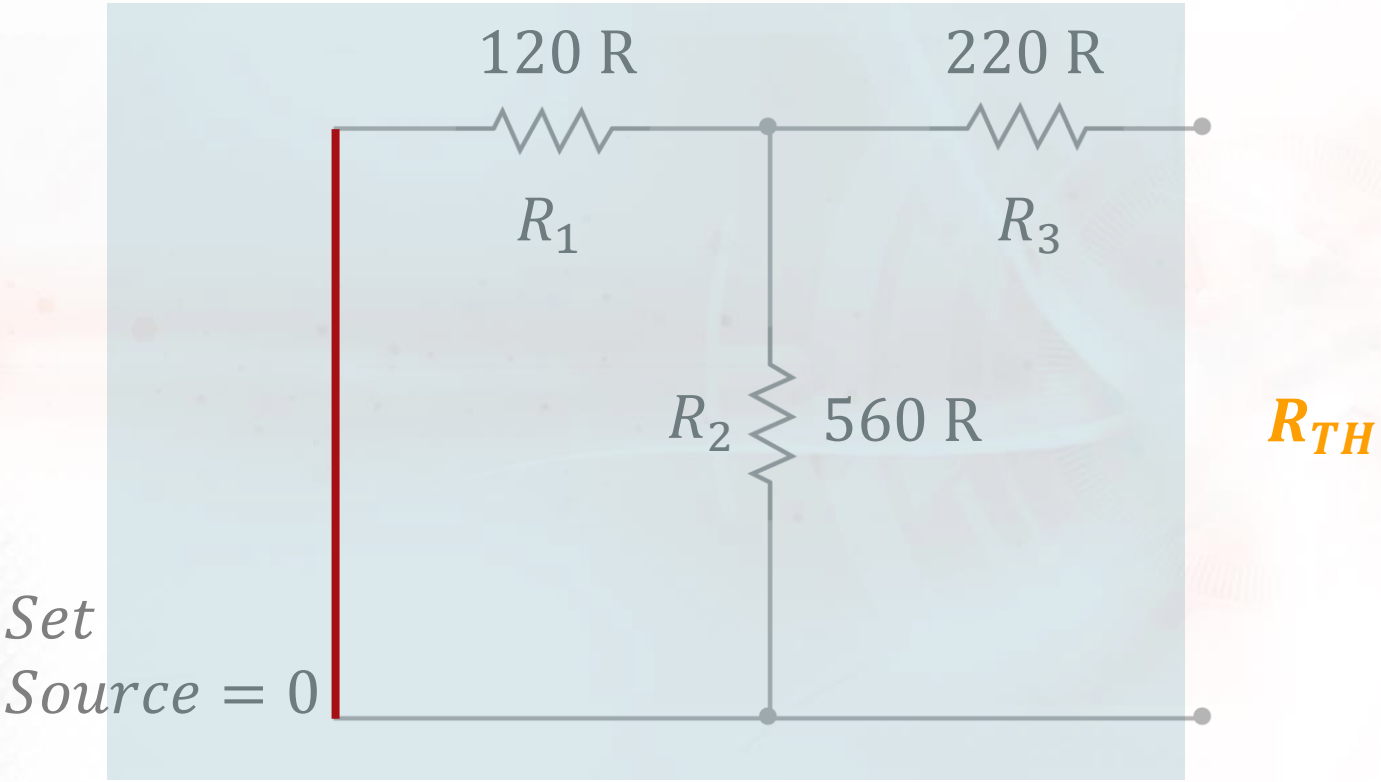
120 R
220 R
R_1
R_3
R_2
560 R
R_{TH}
Set
Source = 0

THEVENIN EQUIVALENT NETWORK

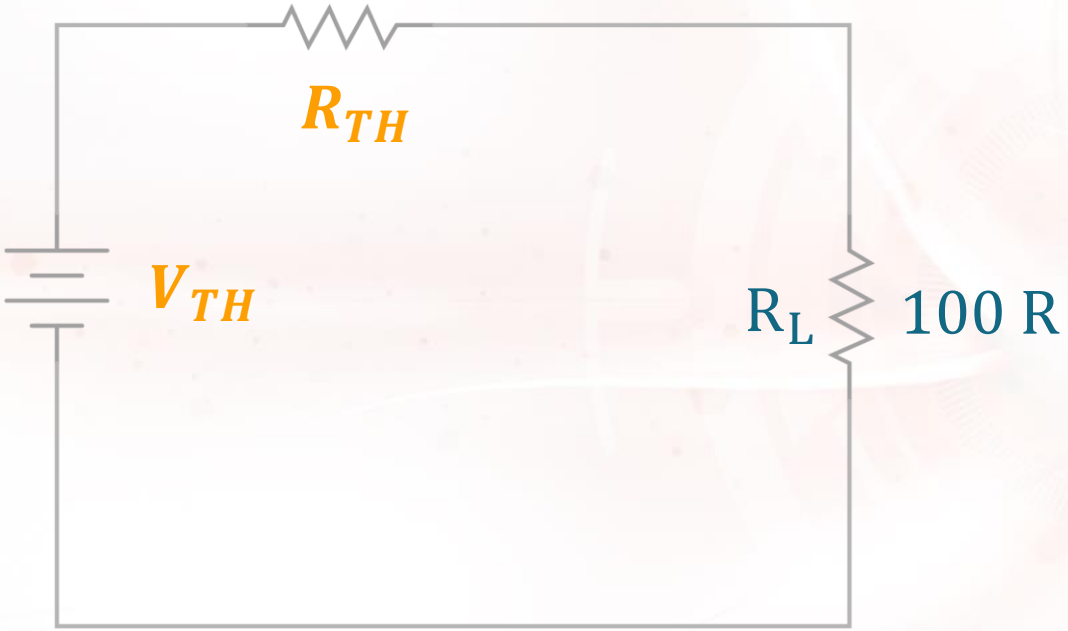

VOLTAGE-DIVIDER BIAS CIRCUIT

THEVENIN VOLTAGE, v_{TH}

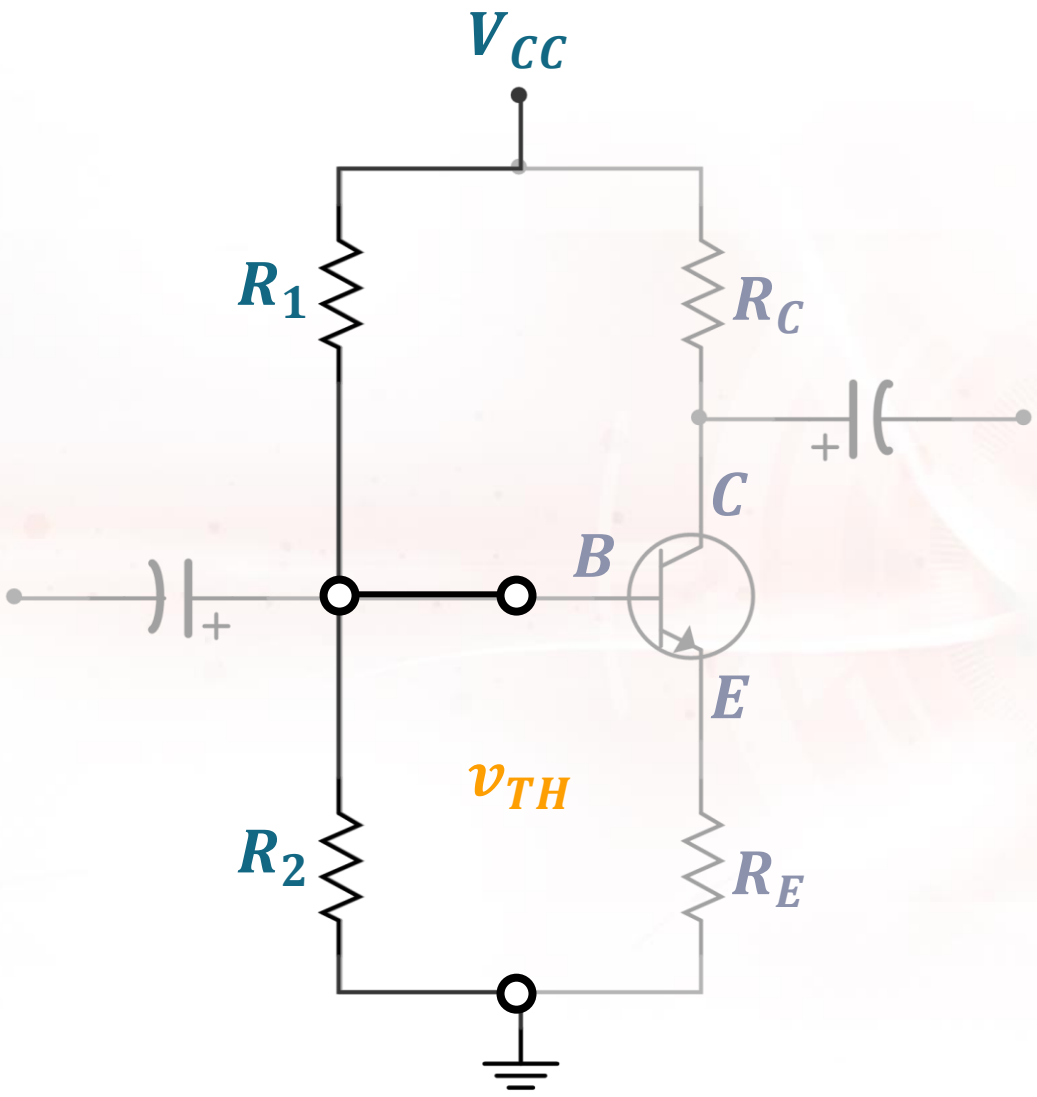

$$v_{TH} = V_{CC}\frac{R_2}{R_1 + R_2}$$

THEVENIN RESISTANCE, R_{TH}

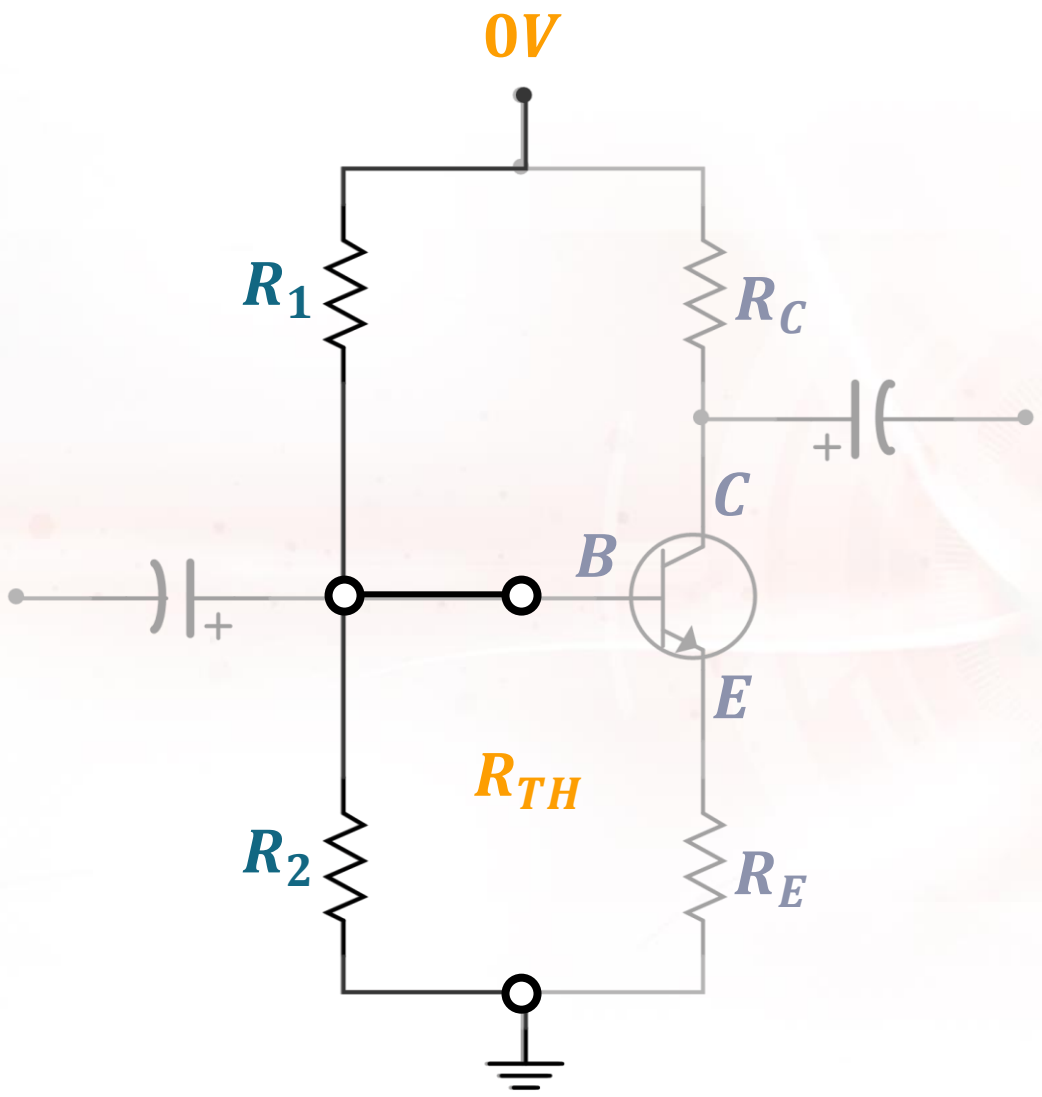

$$\frac{1}{R_{TH}} = \frac{1}{R_1} + \frac{1}{R_2}$$

BASE-EMITTER LOOP

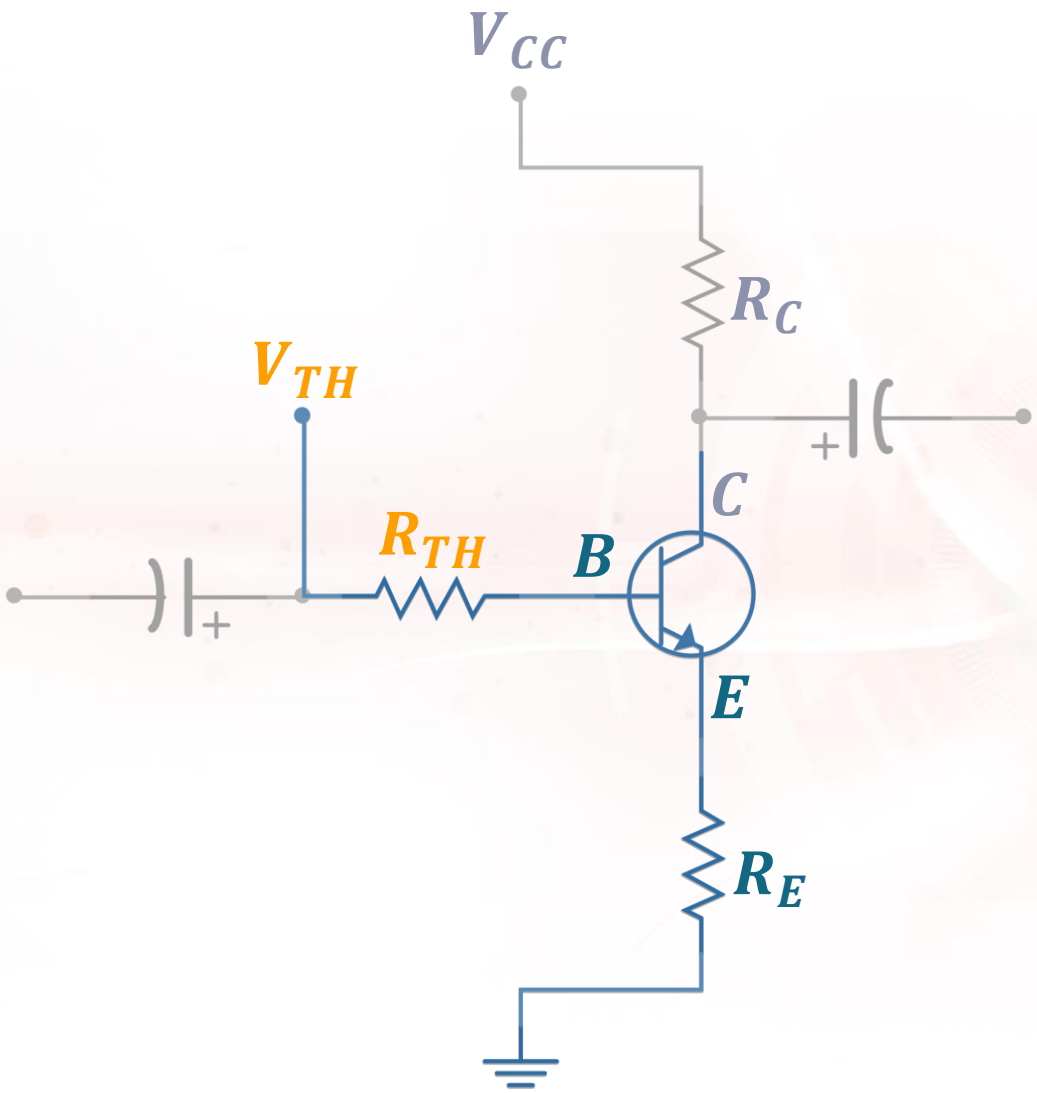

KVL @ B-E,

$$i_B = \frac{V_{TH} - v_{BE}}{R_{TH} + (\beta + 1)R_E}$$

COLLECTOR-EMITTER LOOP

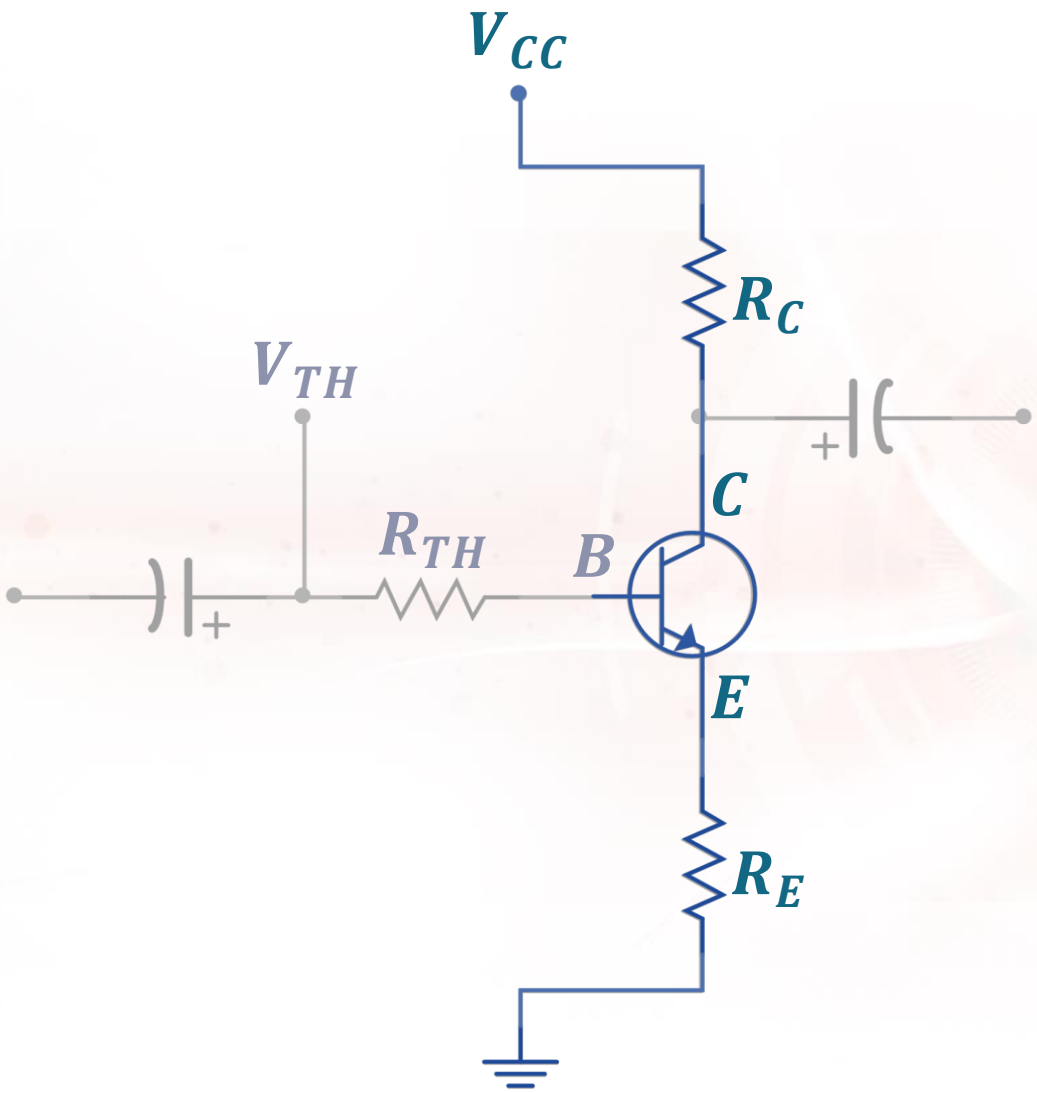

KVL @ C-E,

$$v_{CE} = V_{CC} - i_C(R_C + R_E)$$

Determine the dc bias voltage v_{CE} and the current i_C for the given **voltage-divider** network.

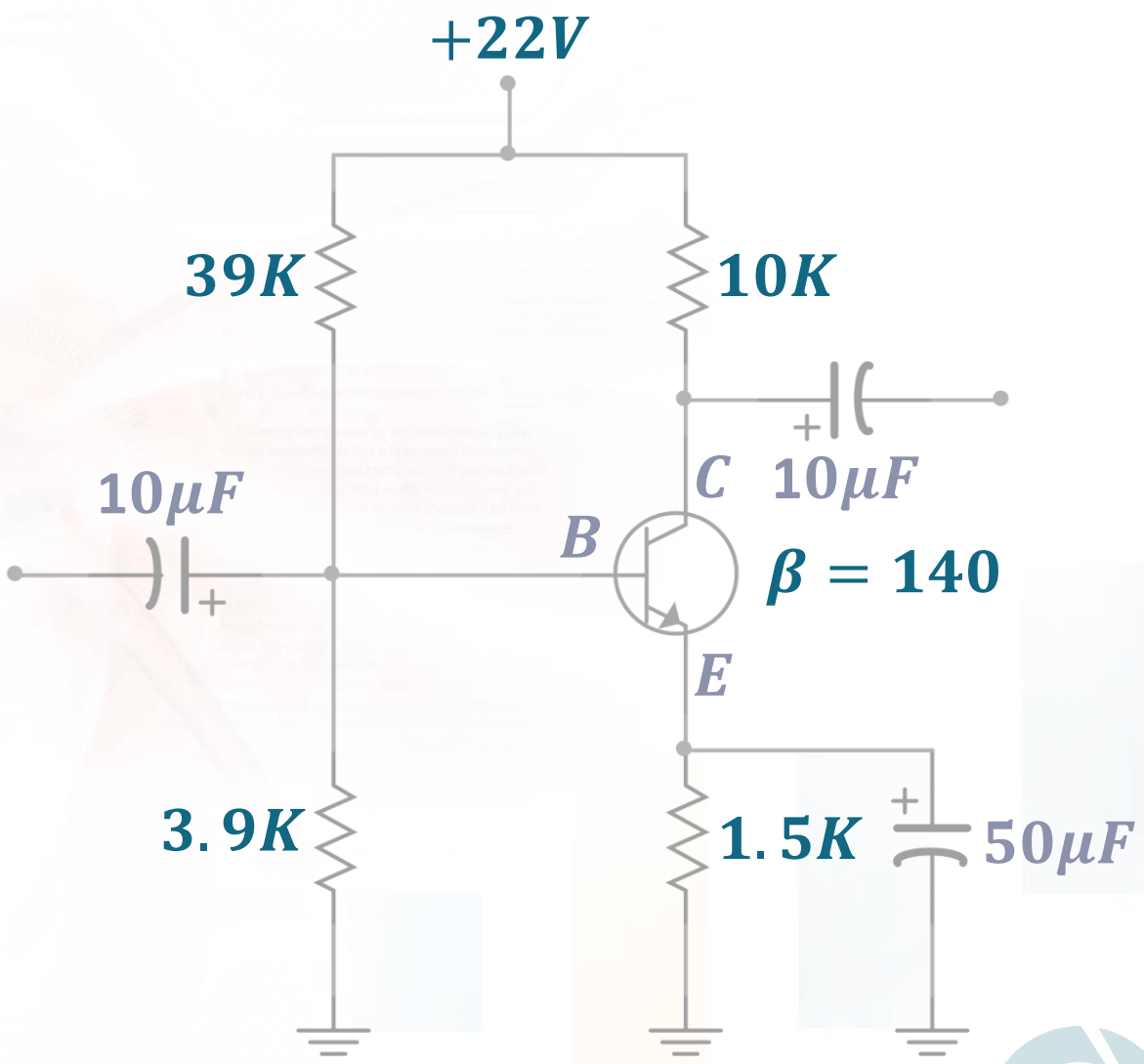

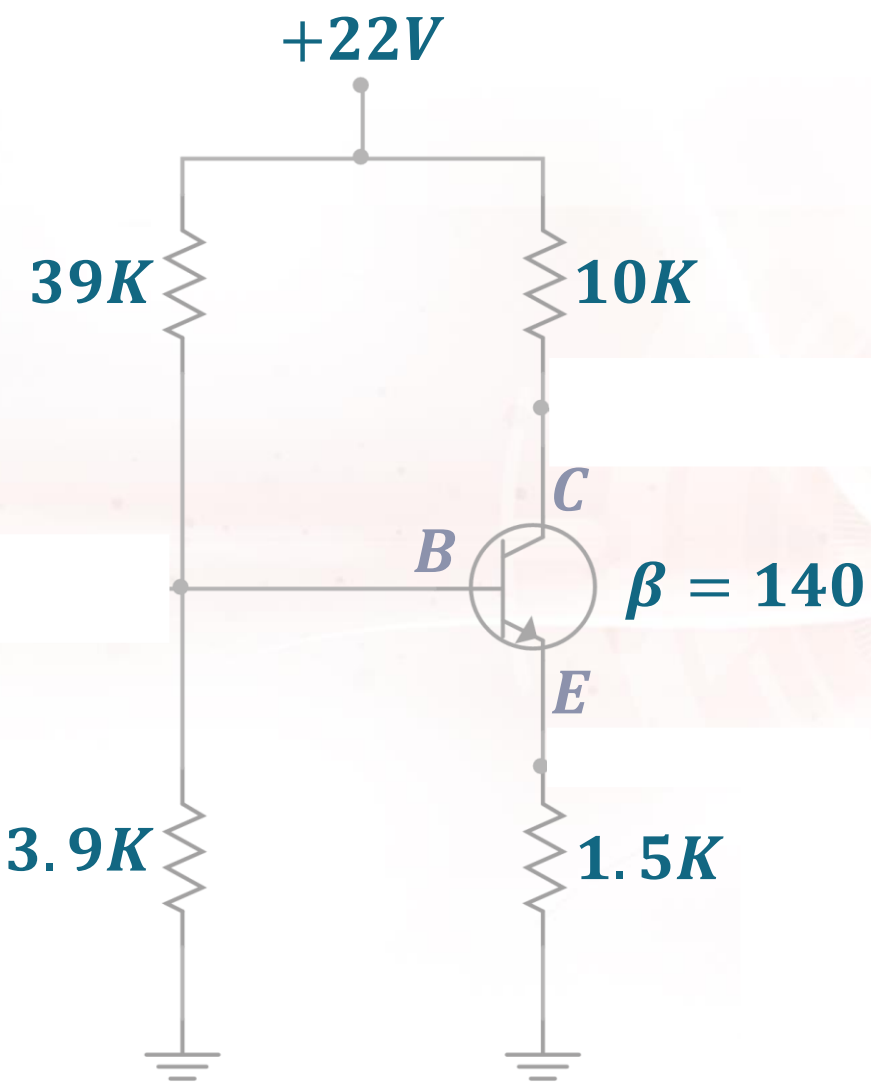
+22V
39K
10K
C
B
β = 140
E
3.9K
1.5K

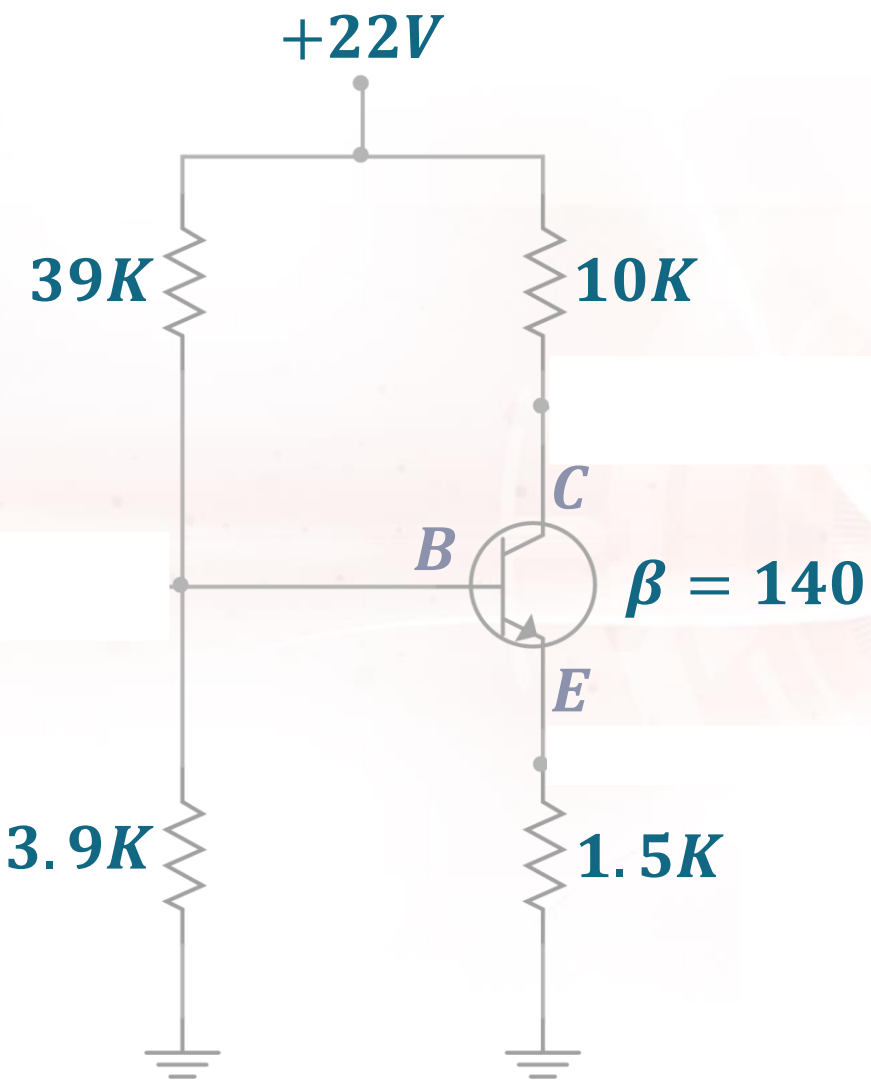
+22V
39K
10K
C
B
β = 140
E
3.9K
1.5K

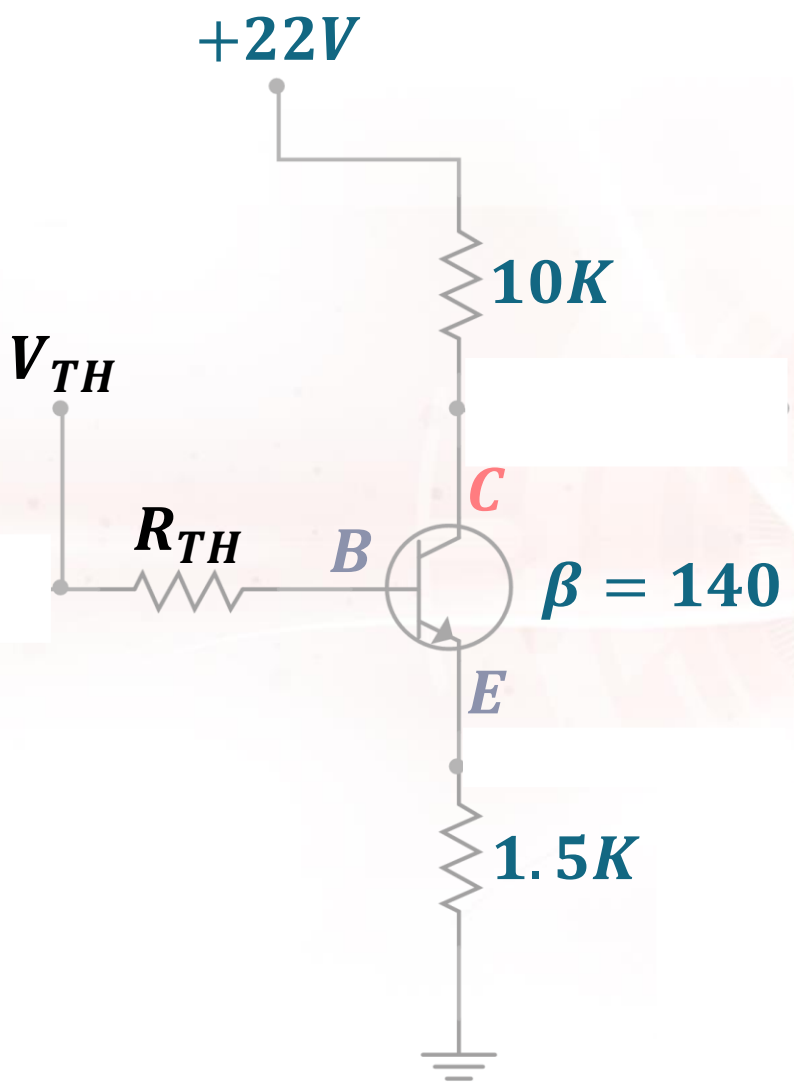
+22V
10K
V_TH
C
R_TH
B
β = 140
E
1.5K

v_{CE-}

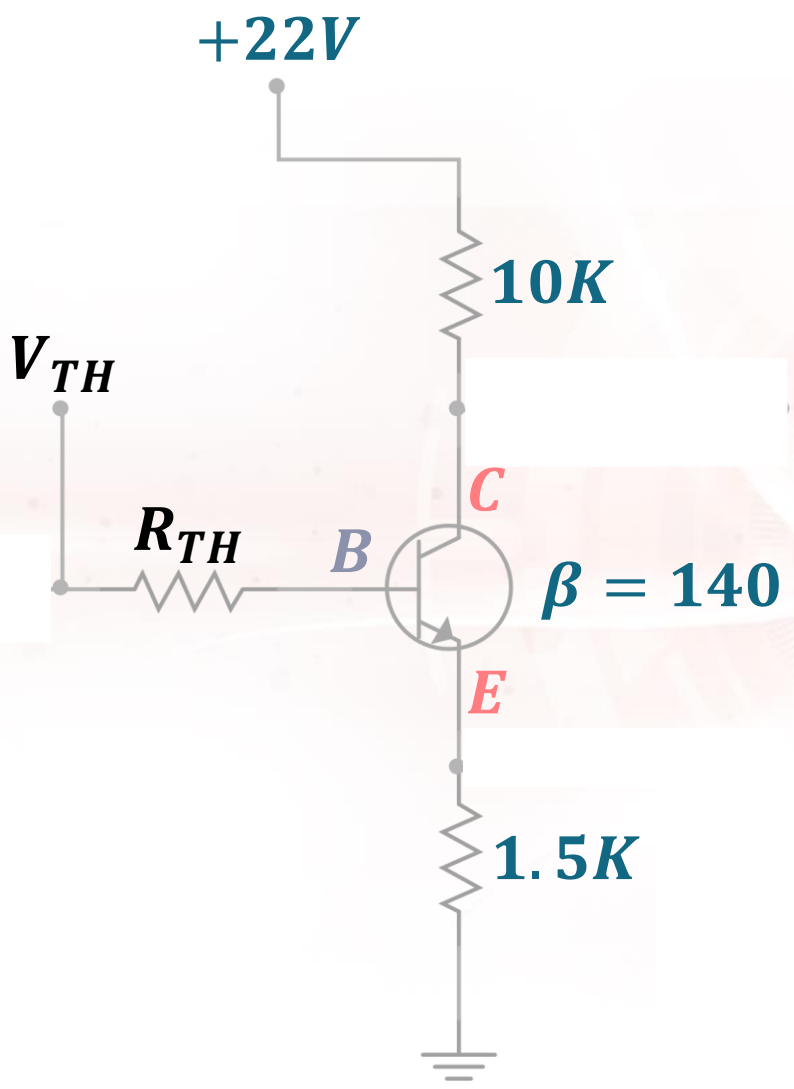

SATURATION POINT

"Mental Short"

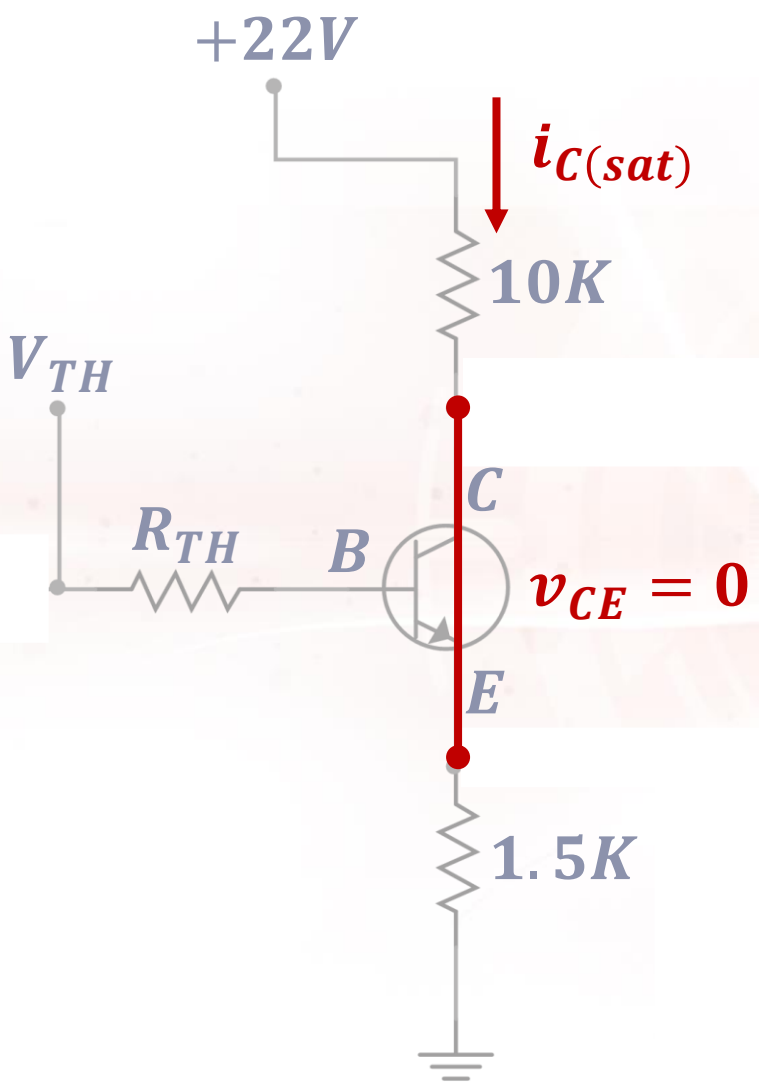

CUTOFF POINT

"Mental Open"

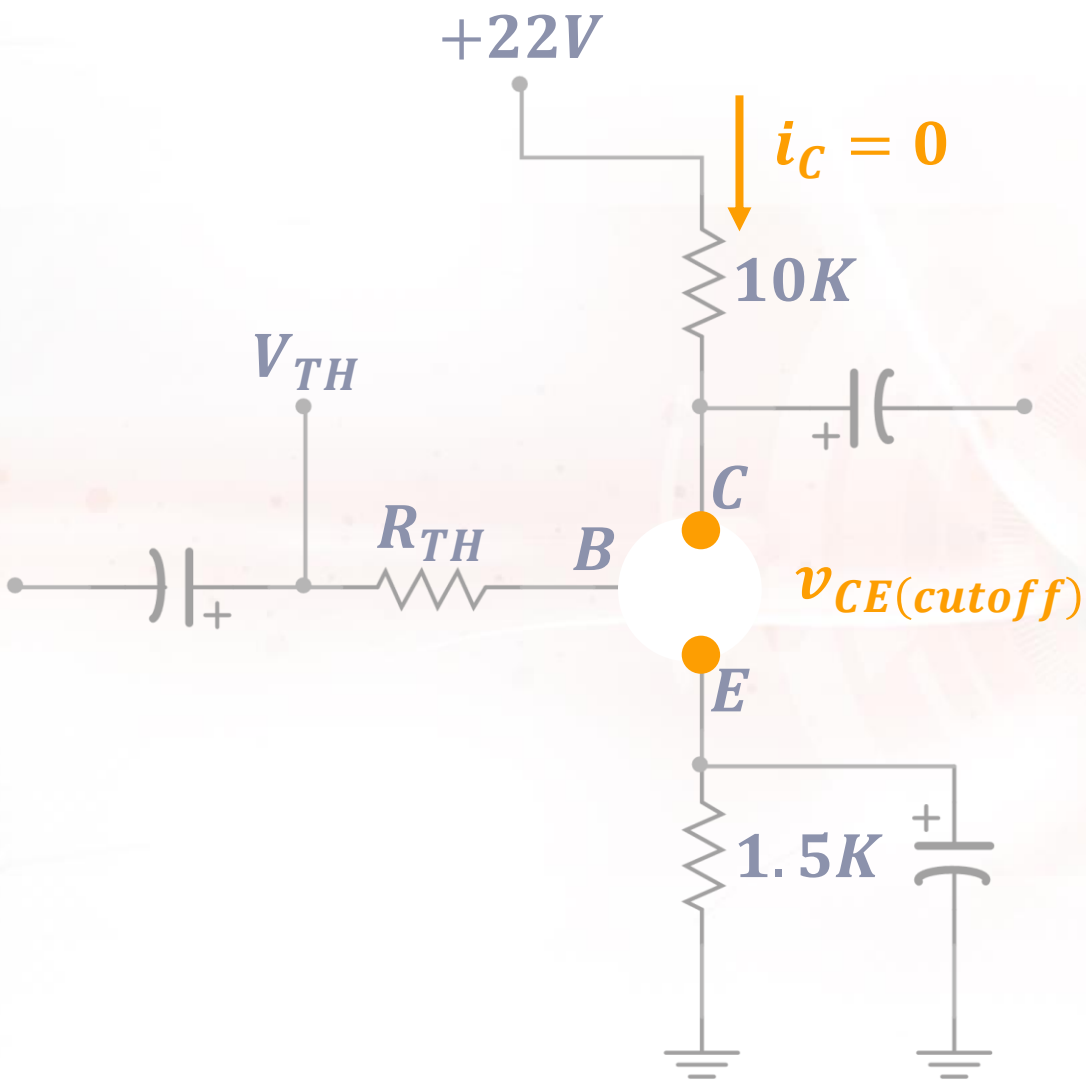

LOAD LINE ANALYSIS

INDEPENDENT OF THE TRANSISTOR BETA

β	$i_C(mA)$	$V_{CE}(V)$	$\%\Delta V_{CE}$
140	0.85	12.2	**2%**
70	0.83	12.5	

LABORATORY